Convertible Top Hydraulic Cylinder: Service and Repair
Removing and Installing/Replacing Hydraulic Cylinder For Clamping Bar on Right

54 34 009 Removing And Installing/Replacing Hydraulic Cylinder For Clamping Bar On Right

Follow instructions for carrying out repairs on convertible top hydraulic system.

Necessary preliminary tasks:
- Remove convertible top.

CAUTION:
- **Hydraulic fluid may escape from removed lines and open connections.**
- **Protect components and work area with suitable materials (e.g. cloths).**

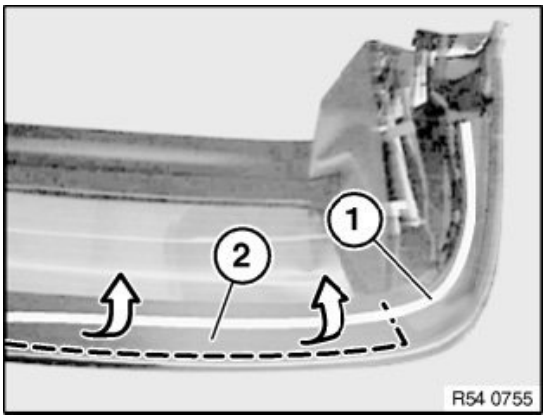

Release all screws in area of securing rail (1).
Fold securing rail downwards.
Fold roof lining (2) inwards.

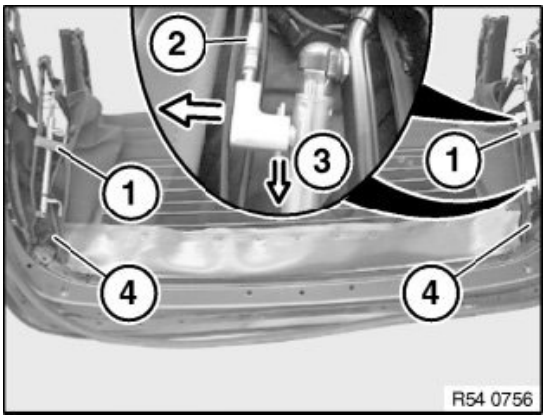

Release screws of front straps (1).
Disconnecting lines (2):
- Detach pin (3) towards bottom
- Remove lines (2) sideways.

CAUTION: Protect joints (lines and cylinder) against dripping fluid (e.g. cleaning cloth).

Release cable straps (4).

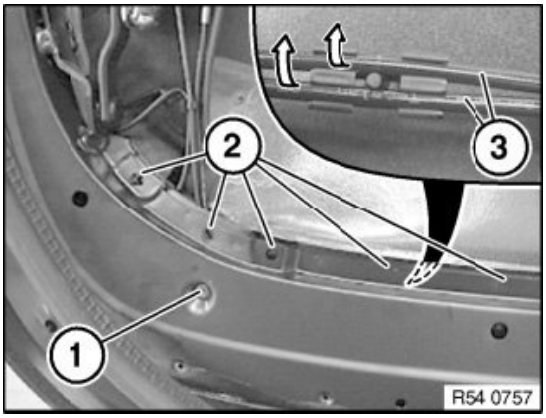

Release screws (1) on right and left.
Removing panel for hydraulic lines from clamping bar:
- Drive pins (2) of clips on left and right inwards.
- Remove panel.

Unclip lines (3).

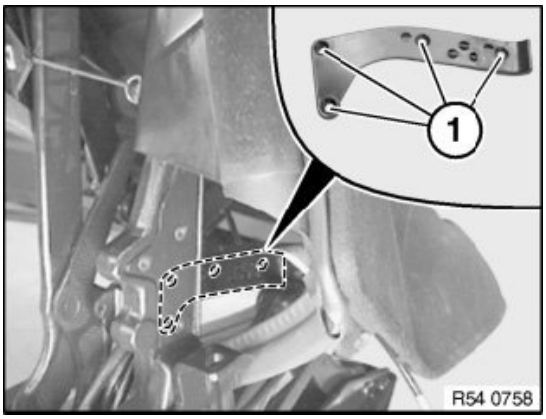

Release screws (1) of cover. Expose covered screws by moving convertible top and clamping bar.

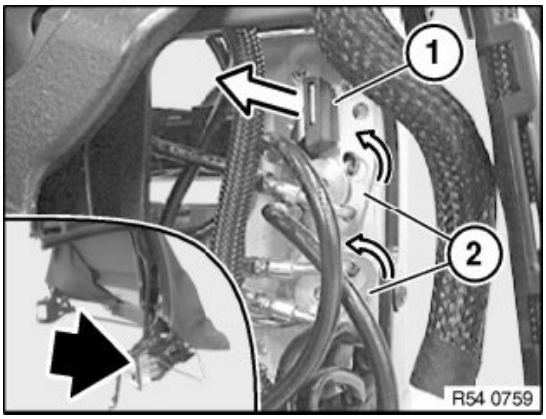

Detaching hydraulic hoses from control unit:
- Bend plastic retainer (1) back slightly from hydraulic line and detach sideways.
- Turn lock (2).
- Remove hydraulic lines.

CAUTION: Protect joints (lines and control unit) against dripping fluid (e.g. cleaning cloth).

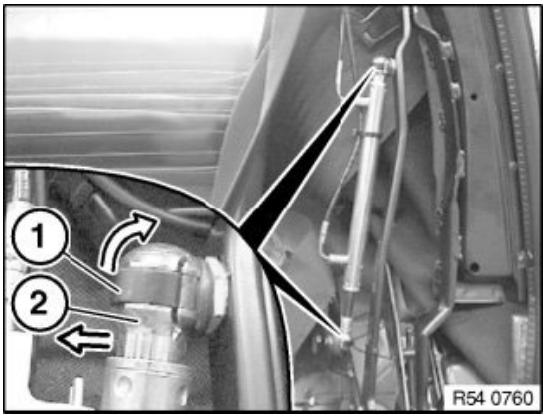

Unlock retainer (1).
Remove hydraulic cylinder (2).
Feed out hydraulic cylinder with hoses.

Installation:
- Carry out operational check.
- Check convertible top settings.
- Check fluid level.