51 32 154 Adjusting front left or right door window glass (coupé, convertible)

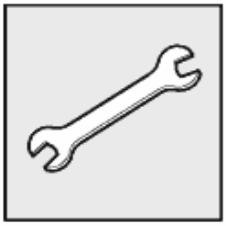

Special tools required:

- 41 6 120
- 51 3 080

Note:

The molding must be removed for all adjustments except vertical adjustment.

If necessary, remove molding in front door.

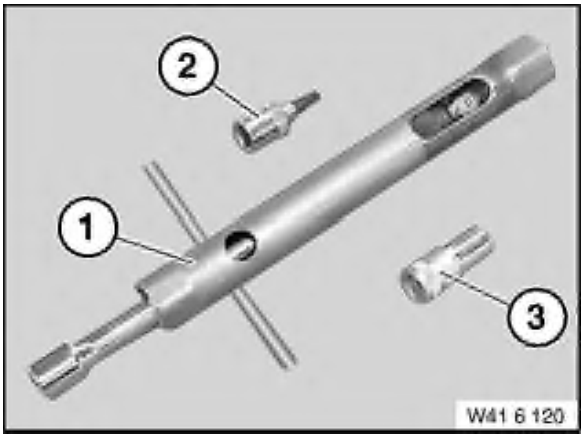

Note:

Special tool 41 6 120 is required for adjusting door window glass (not for vertical adjustment).

To avoid paintwork damage:

Tape off special tool in front area with adhesive tape.

Attach insert (3) "TORX E7" to basic body (1).

On convertible only to avoid rustling noises:

Caution!

Handle door window glass as follows after it has been replaced:

- Handle door window glass only in retraction area of convertible top seal on both sides and on top edge
- Clean retraction area with glass cleaner*
- Coat retraction area with Aquapel*

* Sourcing reference: BMW Parts Service

Follow instructions for use on containers.

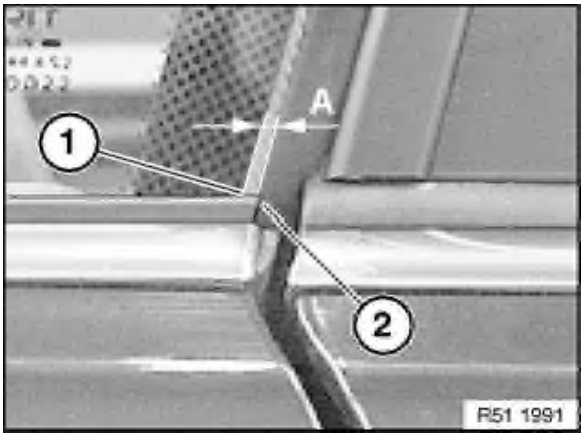

Longitudinal adjustment:

Ideal adjustment:

Door window rear edge (1) must protrude by distance (A) in front of edge (2) of outer sealing lip of window cavity cover strip.

A= 1 to 2 mm

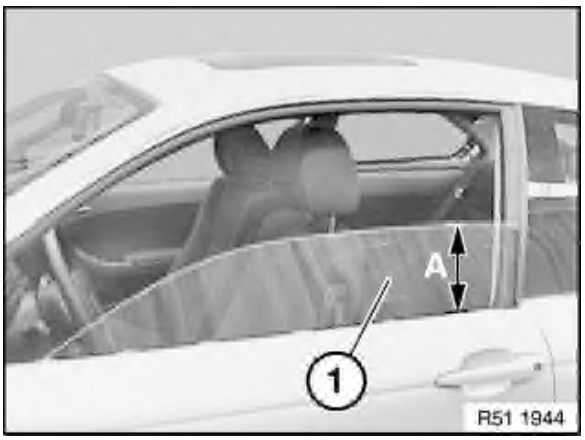

Lower door window glass down to dimension (A).

A= approx. 155 mm

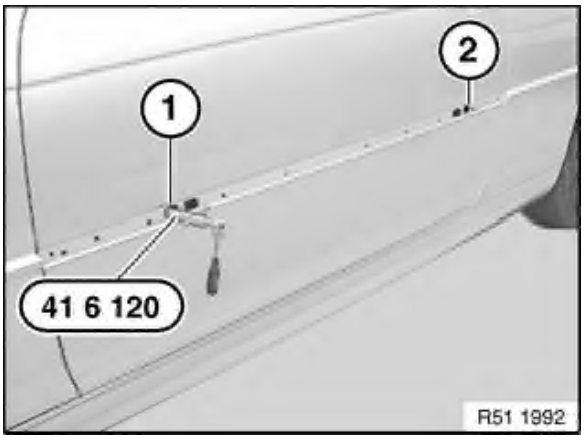

Note:

To release Torx screws:

Turn to left.

When releasing rear Torx screw:

Grip with hexagon of special tool 41 6 120 .

Slacken Torx screws with special tool 41 6 120 through outer adjustment bores (1) and (2).

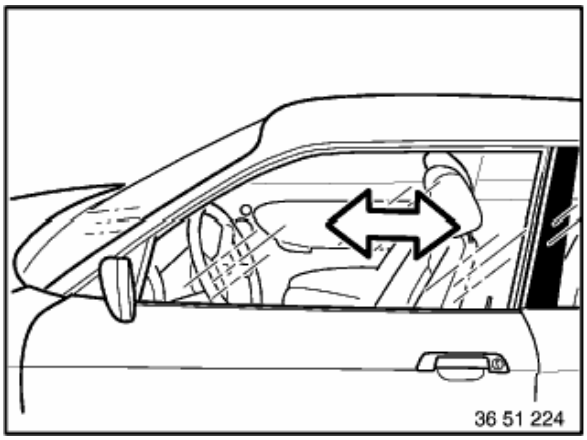

Close door window glass and align in longitudinal direction.

Tighten down TORX screws with special tool 41 6 120 .

Tightening torque 51 32 2AZ.

Caution!

Check emergency function.

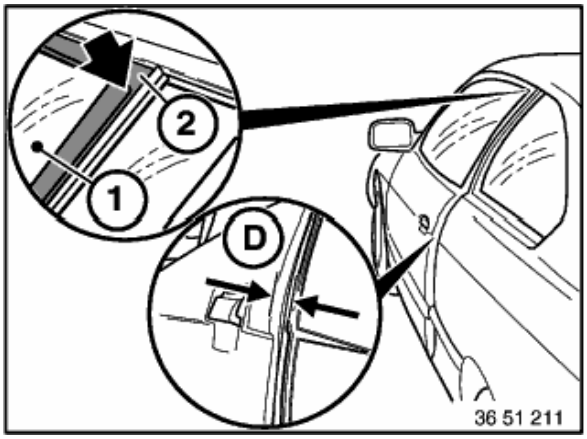

Pretension:

Ideal adjustment:

Close door window glass.

Close front door up to first catch (D) of door lock rotary latch.

In this door position, top edge of door window glass (1) must rest at least on door seal (2).

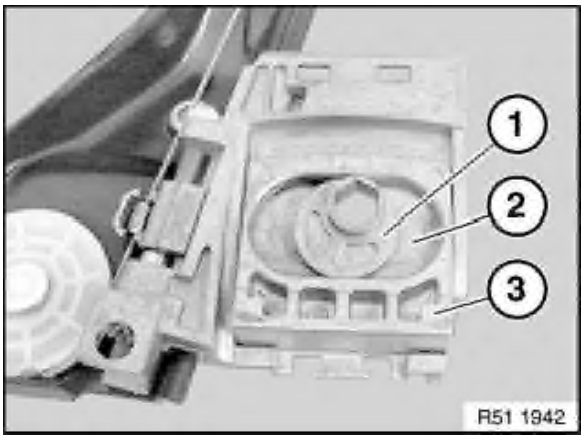

Note:

For purposes of clarity, illustration shows cover, door window glass and screw connection removed.

Preload is adjusted at rear slider (3) only.

Adjust pretension by adjusting eccentric (1) in guide (2) of rear slider (3).

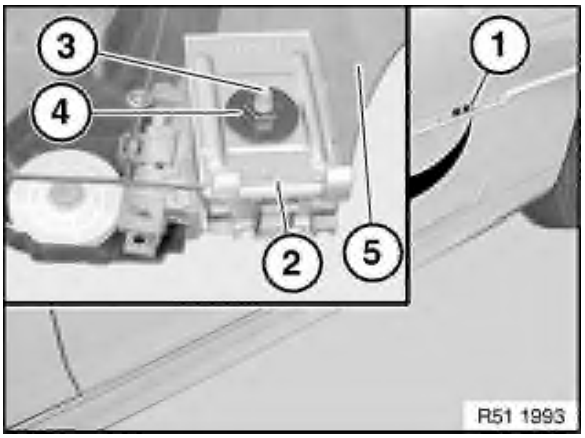

Insert special tool 41 6 120 in rear bore (1) of front door.

Turn Torx screw (3) counterclockwise through 180° and then turn adjusting screw (4) until it is hard to move.

Check adjustment,

see Ideal adjustment.

Repeat procedure as many times until ideal adjustment is reached and lock Torx screw (3) clockwise.

2 Rear slider in front door

Caution!

Check emergency function.

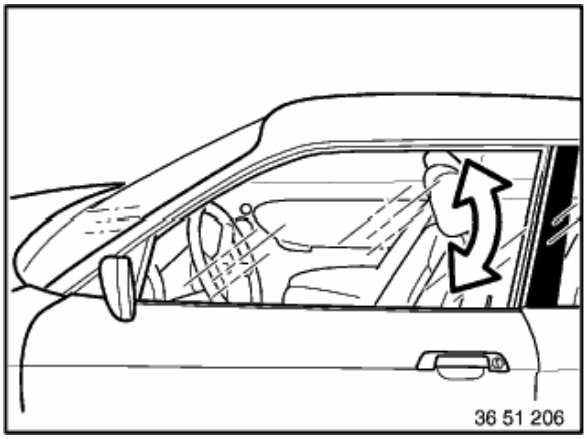

Parallelism (window tilt):

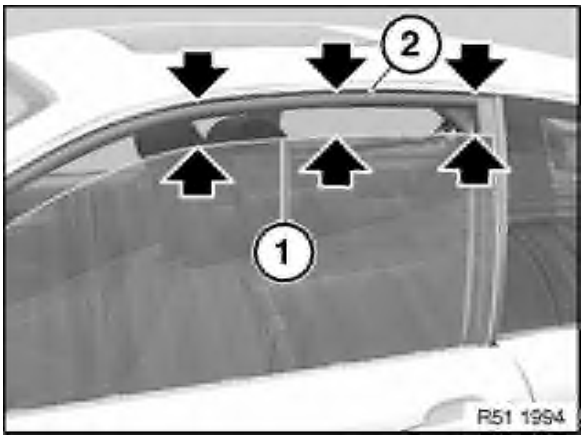

Ideal adjustment:

Door window top edge (1) must be parallel to contour (2) of water drain.

Close door window glass and mark along drip molding at bottom and top with a water-soluble marker pen.

Note:

Clean door window glass.

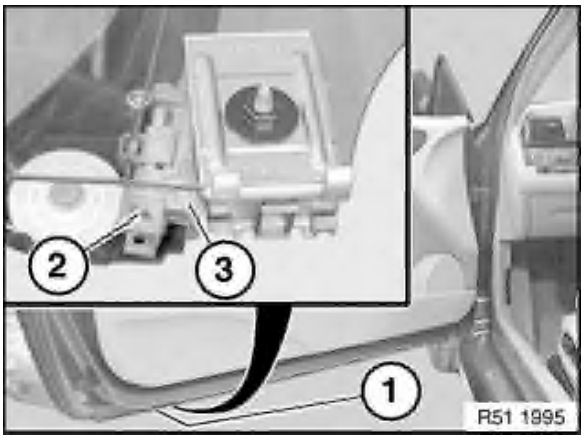

Lower door window glass.

Lever out rear rubber plug on door base.

Parallelism is only adjusted by way of bore (1) in front door at rear slider (3).

Turn Torx screw (2) until ideal adjustment is reached.

Installation:

Insert rubber plug.

Caution!

Check emergency function.

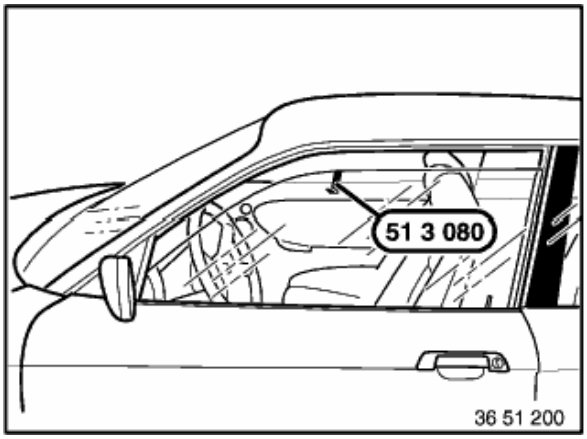

Vertical adjustment (retraction depth):

To measure retraction depth:

- open front door
- Attach special tool 51 3 080 to door window glass
- Close front door and door window glass

To adjust retraction depth:

- Open front door and door window glass
- Lever out rubber plug at bottom
- Adjust with a commercially available TORX T20

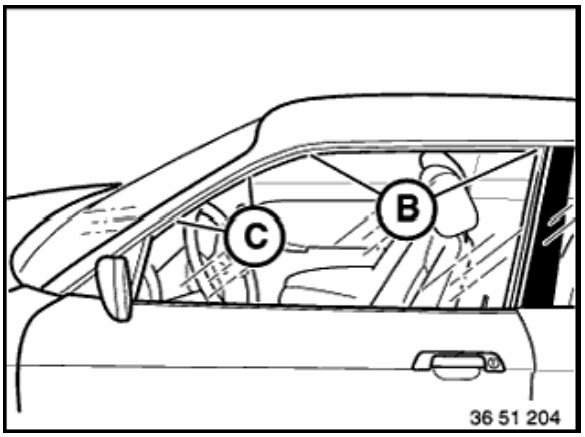

Ideal adjustment:

Dimension (C) is measured at center of A-pillar.

B = min. 3 mm; max. 4 mm

C = min. 3 mm; max. 4 mm

Note:

First adjust rear slider.

If necessary, also adjust front slider.

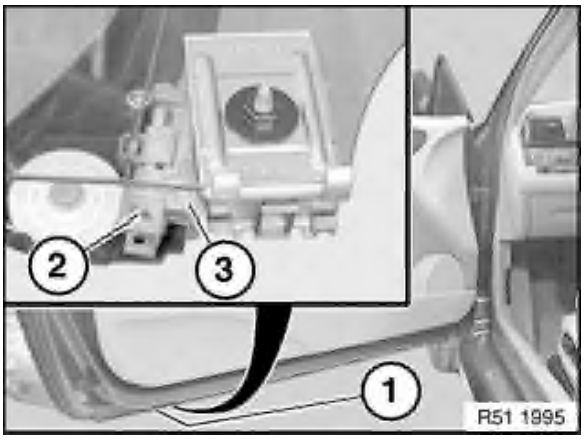

Lower door window glass.

Lever out rear rubber plug on door base.

Vertical adjustment is adjusted by way of bore (1) in front door at rear slider (3).

Turn Torx screw (2) until ideal adjustment is reached.

Installation:

Insert rubber plugs.

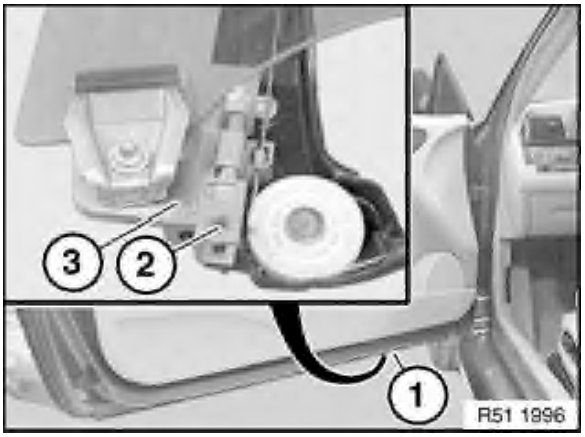

Note:

If retraction depth (C) at front is not achieved:

Lower door window glass.

Lever out front rubber plug on door base.

Vertical adjustment is adjusted by way of bore (1) in front door at front slider (3).

Turn Torx screw (2) until ideal adjustment is reached.

Installation:

Insert rubber plug.

Caution!

Check emergency function.

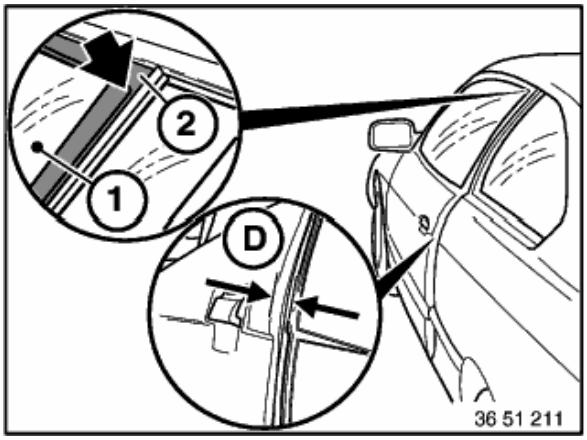

Emergency operation:

<u>Ideal adjustment:</u>

Close door window glass.

Close door lock rotary latch with front door open.

Door window glass now travels to its limit position.

<u>Only coupé:</u>

In this door position, top edge of door window glass (1) must rest on door seal (2).

<u>Convertible only:</u>

Measurement (D) = 25 mm

<u>Coupé and convertible:</u>

Door window glass must retract under water drain in area of mirror triangle of A-pillar.

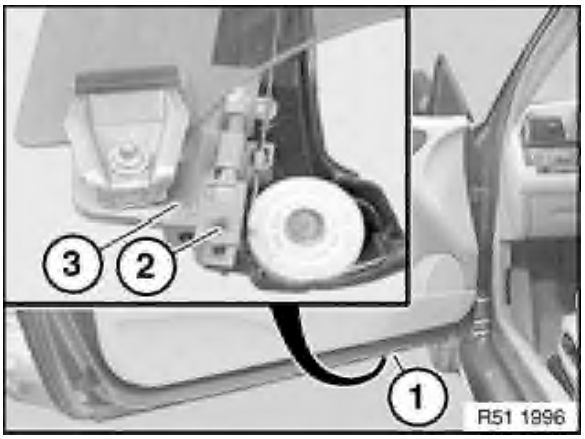

Note:

<u>If door window sticks:</u>

- Lower door window glass
- Lever out front rubber plug on door base
- Turn TORX screw (2) on front slider (3) until ideal setting is obtained

Installation:

Insert rubber plugs.

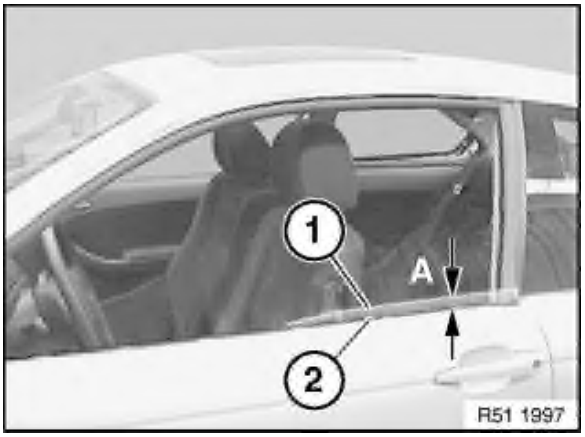

Protrusion of door window glass:

Ideal adjustment:

Door window glass (1) is permitted to have a max. protrusion (A) to door well (2).

A= max. 2 mm

If necessary, check complete adjustment.

Caution!

Check emergency function.

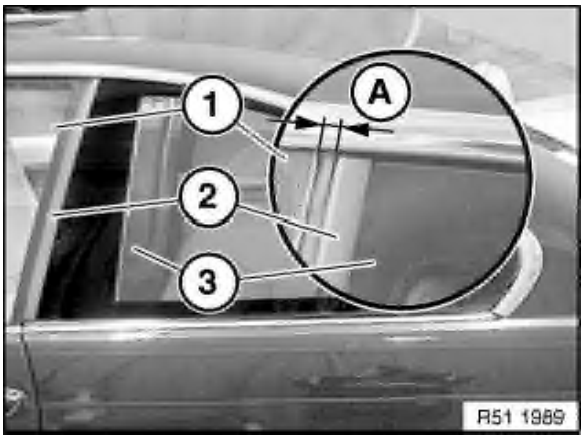

Distance of trim (2) to door window glass (1) (coupé):

Ideal adjustment:

A= 6 ± 0.75 mm

If necessary, detach trim (2) from side window (3) and replace.

Note:

Trim (2) must fit on other side.

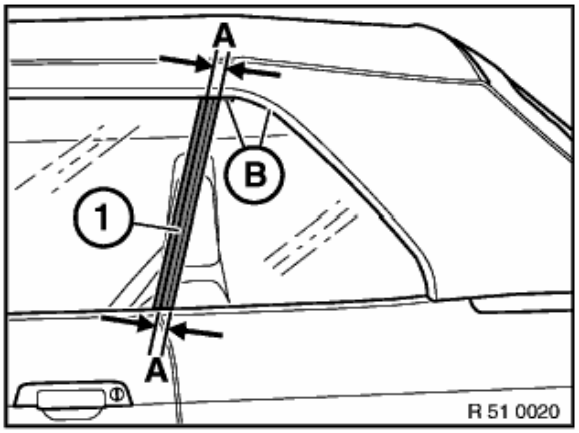

Distance between side window and door window glass (convertible):

Ideal adjustment:

A= to 25 mm

Distance (A) is measured from seal (1) at rear to front door window edge at rear.