Original BMW Accessories.
Installation instructions.

Retrofitting BMW Performance Air Cleaner System
BMW 3 Series (E46) with M54 Engine

Installation instructions only apply to vehicles 325i, 325ci, 330i and 330ci.

Retrofit Kit No.:	13 72 0 432 306	Performance Air Cleaner System (325i, 325ci)
	13 72 0 429 613	Performance Air Cleaner System (330i, 330ci)

Installation Time

The installation time of **approx. 0.5 hours** may vary depending on the vehicle's condition and equipment.

Important information

These installation instructions are primarily designed for use within the BMW dealership organization and by authorized BMW service companies.

In any event, the target group for these installation instructions is specialist personnel trained on BMW vehicles with the appropriate specialist knowledge.

All work must be completed using the latest BMW repair manuals, circuit diagrams, servicing manuals and work instructions, in a rational sequence, using the specified tools (special tools) and observing current health and safety regulations.

In the event of installation or functional problems, limit troubleshooting to approx. 0.5 hours for mechanical jobs and approx. 1.0 hours for electrical jobs.
To avoid unnecessary work and costs, send a corresponding inquiry via the Aftersales Assistance Portal (ASAP) using the technical parts support application.
Please quote the following:
- Vehicle identification number
- Part number of retrofit kit
- Exact description of the problem
- Work already carried out.

Do not archive the hard copy of these installation instructions, as daily updates are made by ASAP!

All pictures show LHD cars; proceed accordingly on RHD cars.

Pictograms

▷ Denotes instructions that draw your attention to special features.

◀ Denotes the end of the instruction or other text.

Special tools required

None

Table of contents

Section Page

1. Parts overview 4

2. Preparatory work 5

3. Installing Performance Air Cleaner System 6

4. Concluding work and coding 8

1. Parts overview

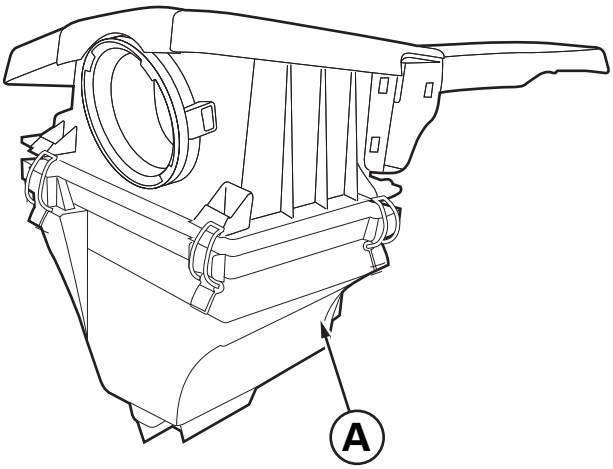

046 1271 V

Legend

A Performance Air Cleaner

2. Preparatory work

	TIS no.
Perform quick test	—
Disconnect negative terminal of battery	12 00 ...
The following components must be removed in advance	
None	

3. Installing Performance Air Cleaner System

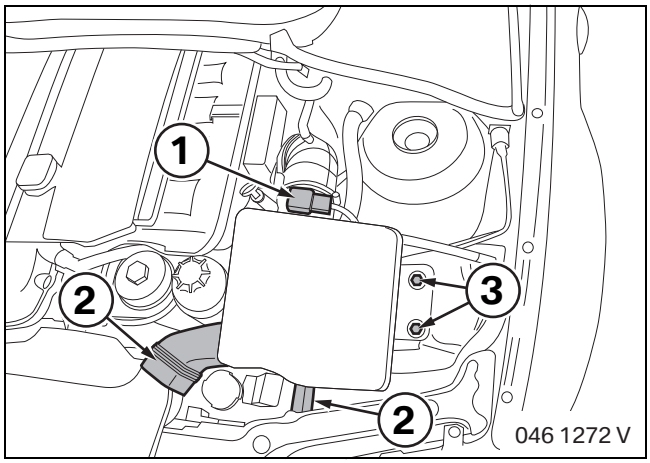

Open left and right clip on mass air flow sensor (1). Disconnect intake air duct (2) and remove screws (3) of air cleaner.

Remove entire air cleaner package.

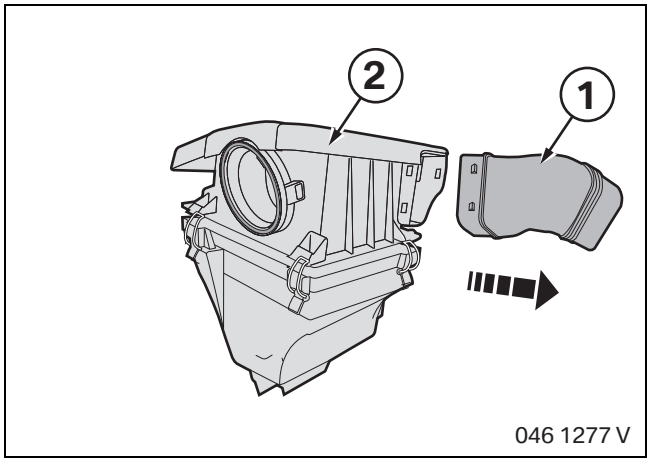

Unclip intake air duct (1) from air cleaner housing (2).

▷ The old air cleaner housing (2) is no longer required. ◂

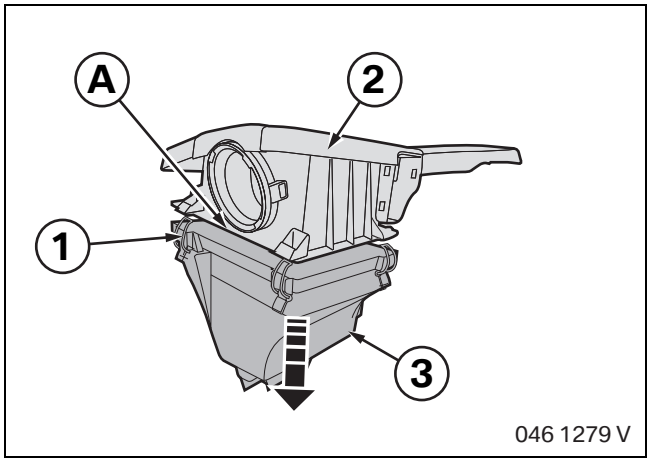

BMW Performance Air Cleaner:

Open clips (1).

Detach top (2) of Performance Air Cleaner **A** from bottom (3).

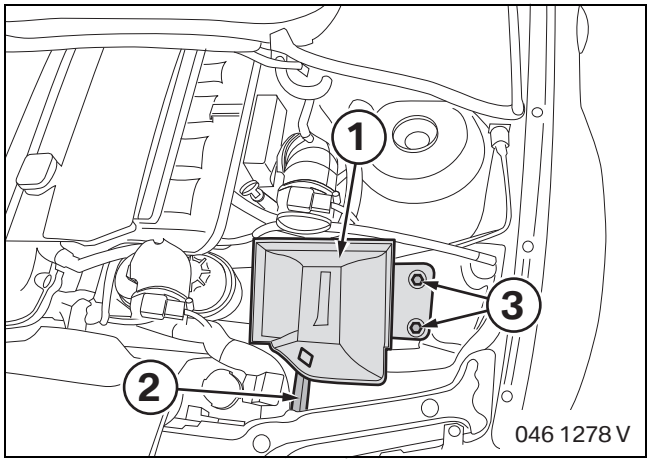

Insert bottom (1) of Performance Air Cleaner **A** in vehicle. Reconnect intake air duct (2).

Screw on bottom (1) of Performance Air Cleaner **A** with screws (3).

3. Installing Performance Air Cleaner System

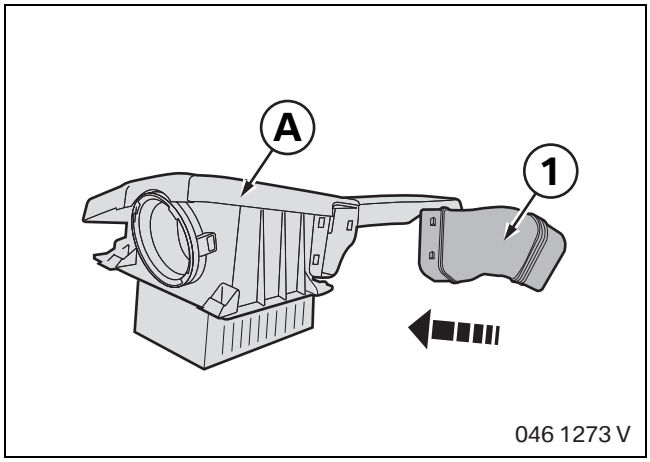

Connect intake air duct (1) to Performance Air Cleaner **A**.

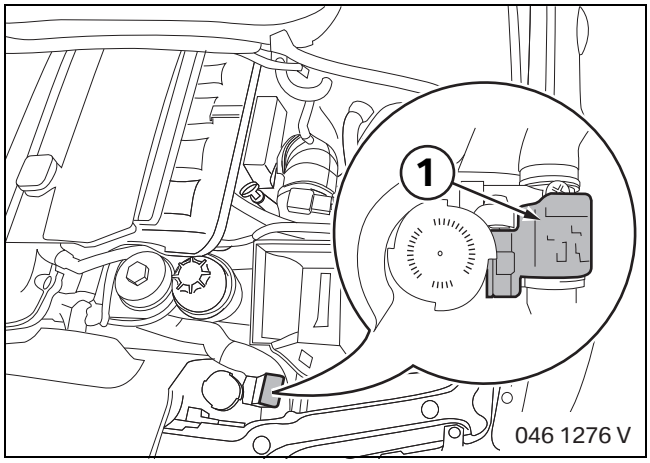

Unclip tab (1).

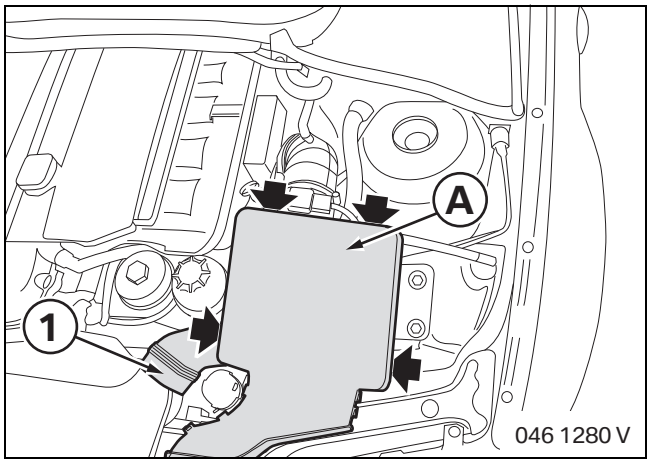

Place assembled top of Performance Air Cleaner **A** on bottom of air cleaner housing in vehicle.

Secure top of Performance Air Cleaner **A** with marked clips.

Mount intake air duct (1).

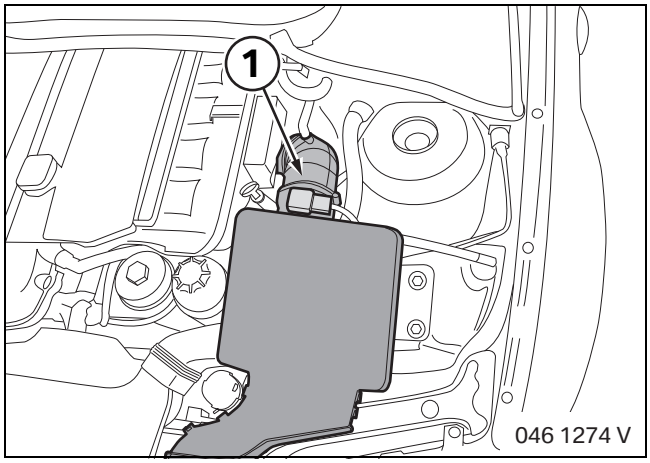

Secure mass air flow sensor (1) with clips on left and right.

4. Concluding work and coding

The retrofit system does not require encoding.

- Reconnect vehicle battery
- Perform quick test
- Reassemble vehicle in reverse order